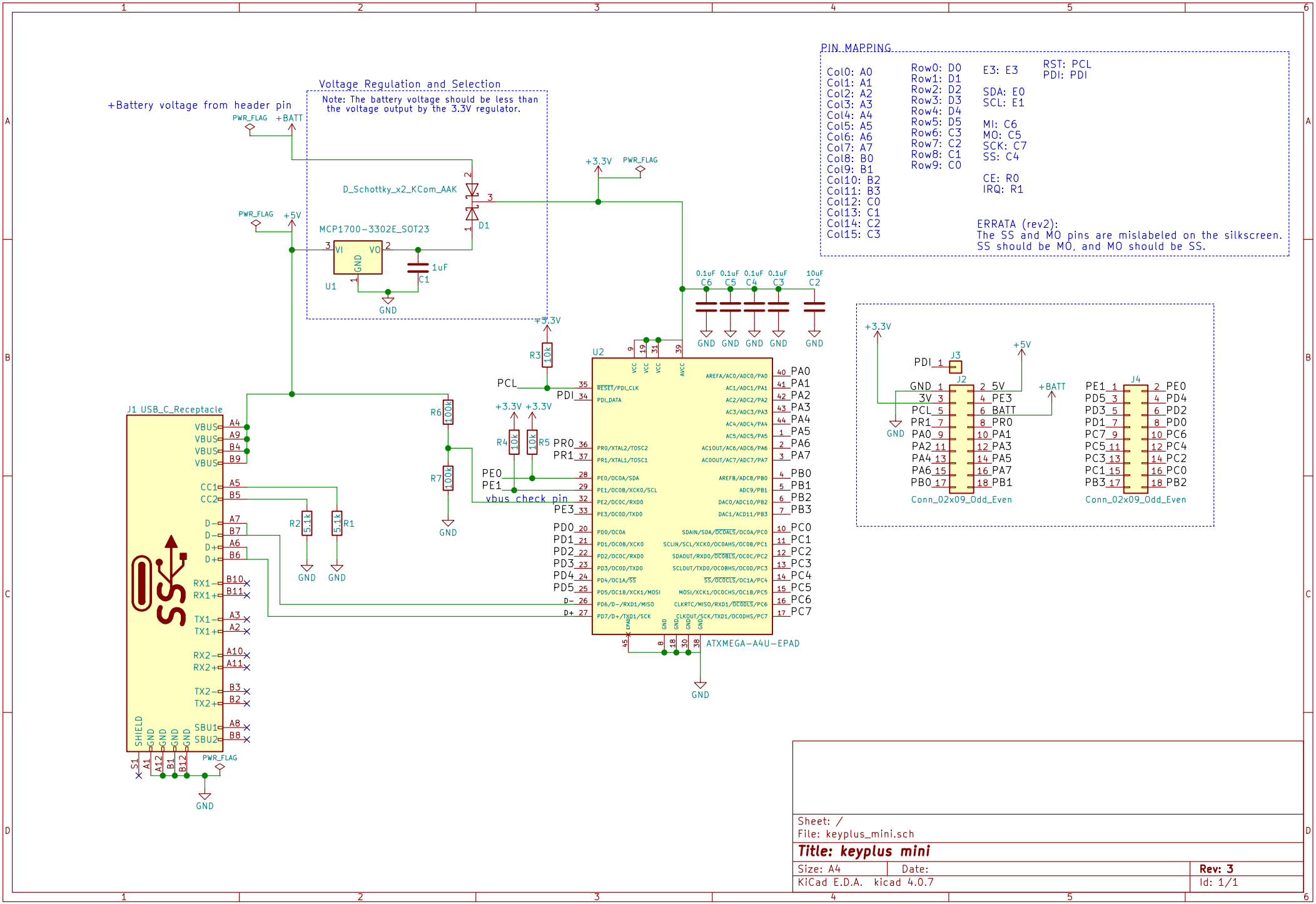

Sheet: /
File: keyplus_mini.sch

Title: keyplus mini

Size: A4	Date:	Rev: 3
KiCad E.D.A. kicad 4.0.7		Id: 1/1